H:\13000\13357 Geotechnical Services for Geohazard Assessment - Athabasca (CON\0017605)\Drafting\JGP\2016 SPRING\13357-NC014-1-1.dwg - 1 - Jul. 15, 2016

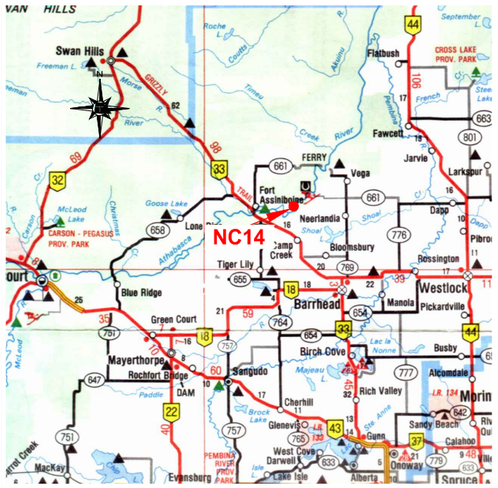

KEY MAP

N.T.S

NOTES:

THE MANHOLE WAS DESIGNED BY OTHERS TO COLLECT SURFACE WATER FROM EXISTING GULLY. SUBHORIZONTAL SUBDRAINS WERE NOT FOUND DURING THE FALL 2014 INSPECTION.

MANHOLE #1 DETAILS (2014)

N.T.S.

	GPS COORDINATES (UTM-NAD83)	
	NORTHING	EASTING
CATCH BASIN	6023315	644904

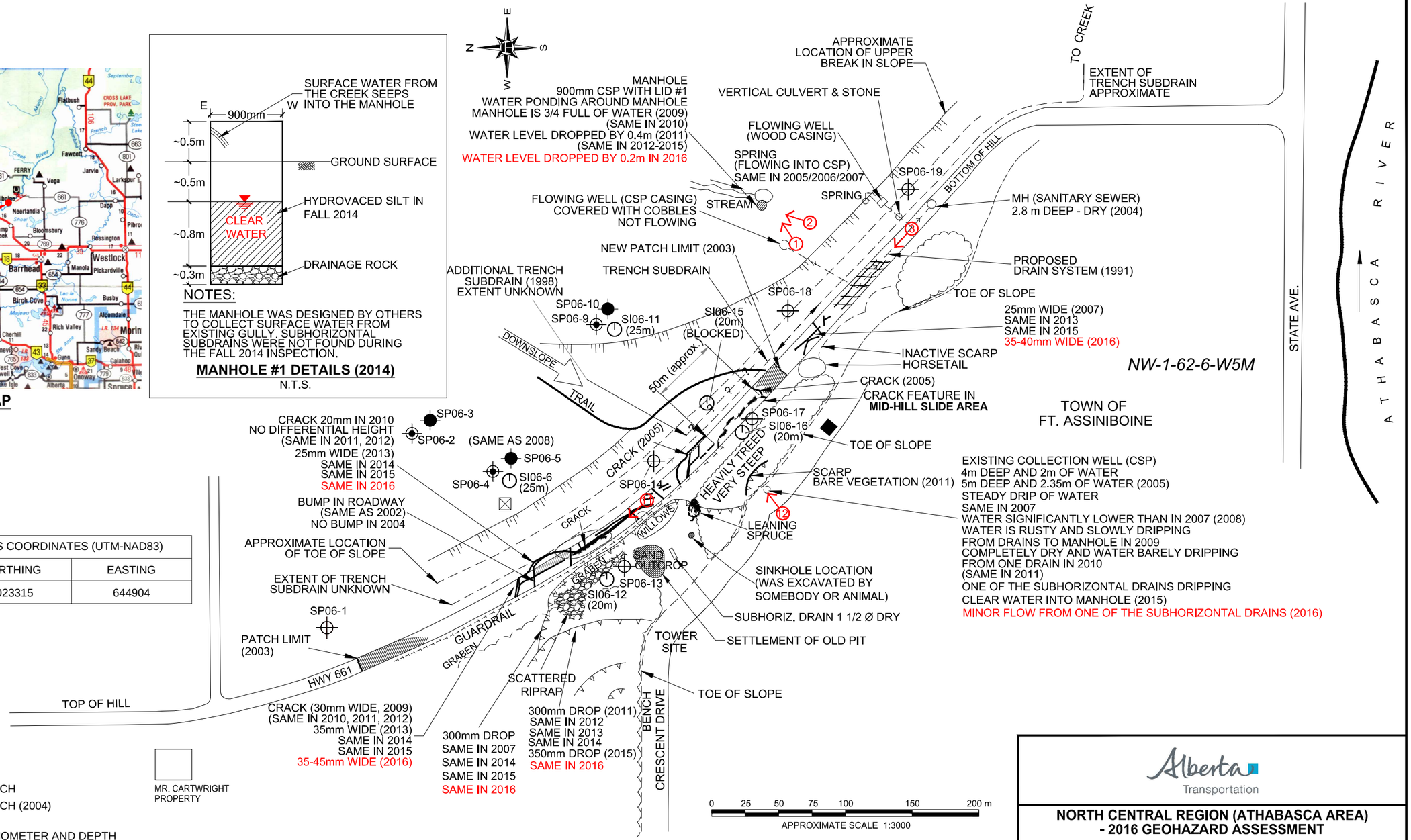

LEGEND

- ASPHALT PATCH
- ASPHALT PATCH (2004)
- SI (_m) — SLOPE INCLINOMETER AND DEPTH
- SP — STANDPIPE PIEZOMETER (25m DEPTH)
- SP — STANDPIPE PIEZOMETER (15m DEPTH)
- SP — STANDPIPE PIEZOMETER (10m DEPTH)
- PHOTOGRAPH NUMBERED, AND APPROXIMATE LOCATION AND DIRECTION (JUNE 10, 2013)
- WEATHER STATION
- CATCH BASIN

NOTES

1. FEATURE LOCATIONS ARE APPROXIMATE.
2. PREVIOUS OBSERVATIONS SHOWN IN BLACK
3. THREE LEVEL LOGGERS WERE INSTALLED IN SP06-2, SP06-3, AND SP06-13 AND TWO VIBRATING WIRE PIEZOMETERS WERE INSTALLED IN SP06-4 AND SP06-5.
4. *MAY 18, 2016 OBSERVATIONS ARE SHOWN IN RED*

Alberta Transportation

NORTH CENTRAL REGION (ATHABASCA AREA) - 2016 GEOHAZARD ASSESSMENT

NC014-1: HWY 661:02 FORT ASSINIBOINE (km 1.8) SITE PLAN SHOWING EXISTING FEATURES

DWG NO. NC014-1-1

DRAWN BY	ML
DESIGNED BY	JGP
APPROVED BY	TSA
SCALE	AS SHOWN
DATE	JUNE 2016
FILE No.	13357

THURBER ENGINEERING LTD.

H:\13000\13357 Geotechnical Services for Geohazard Assessment - Athabasca (CON\0017605)\Drafting\JGP\2016 SPRING\13357-NC014-1-2.dwg - 2 - Jul. 15, 2016

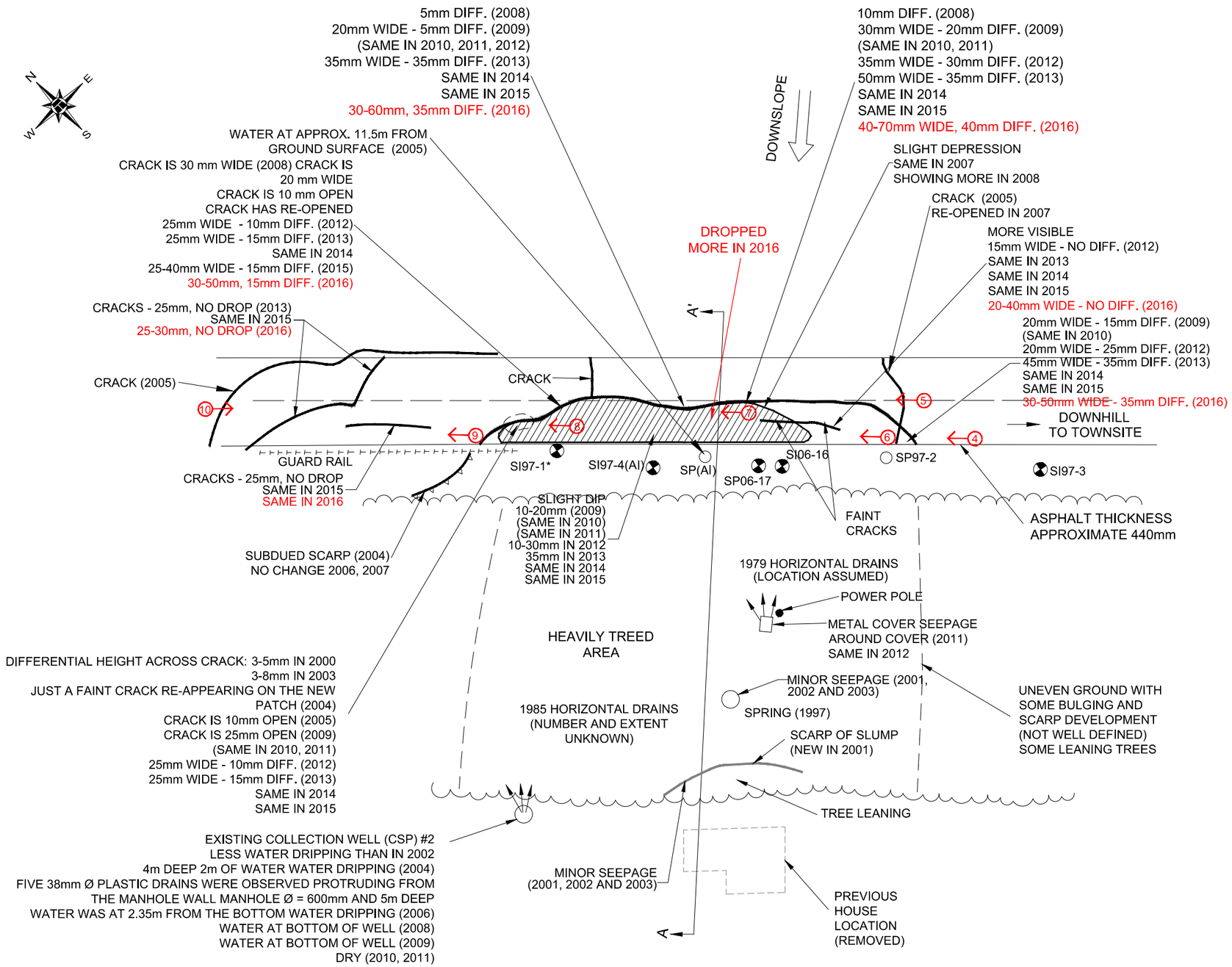

NOTES :

1. FEATURE LOCATIONS ARE APPROXIMATE.
2. PREVIOUS OBSERVATIONS SHOWN IN BLACK
3. PREVIOUS CRACK PATTERN WAS COVERED BY NEW (2004) ASPHALT PATCH
4. *MAY 18, 2016 OBSERVATIONS ARE SHOWN IN RED*

(1) PHOTOGRAPH NUMBER, AND APPROXIMATE DIRECTION AND LOCATION

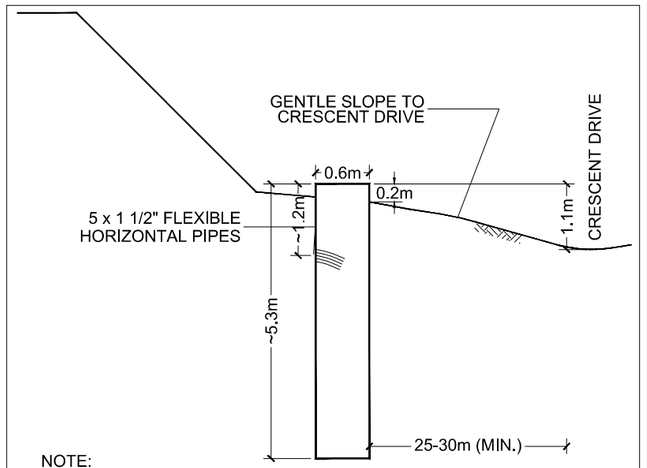

NOTE:
1. MANHOLE COVER WAS LOCKED BY OTHERS AND COULD NOT BE OPENED FOR INSPECTION IN 2012, 2013, AND 2014
2. MH #2 HAS NO OUTFLOW PIPE - WATER IS LIKELY PERCOLATING INTO GROUND. (2015)
3. MINOR FLOW FROM ONE OF SUBHORIZONTAL DRAINS IN 2016.

MANHOLE #2 DETAILS (2014)
N.T.S.

	GPS COORDINATES (UTM-NAD83)	
MANHOLE NUMBER	NORTHING	EASTING
MH #1	6023351	644914
MH #2	6023367	644730
METAL COVER	6023374	644771

LEGEND

SI - SLOPE INCLINOMETER
SP - STANDPIPE PIEZOMETER

Alberta Transportation

NORTH CENTRAL REGION (ATHABASCA AREA) - 2016 GEOHAZARD ASSESSMENT

NC014-1: HWY 661: 02 FORT ASSINIBOINE (km 1.8) SITE PLAN SHOWING MID-HILL SLIDE AREA

DWG NO. NC014-1-2

DRAWN BY	ML
DESIGNED BY	JGP
APPROVED BY	TSA
SCALE	N. T. S.
DATE	JUNE 2016
FILE No.	13357

THURBER ENGINEERING LTD.